Work Order ID 65816

Wednesday, January 26, 2011 11:08:47 AM

Item ID: D2370 **Accept** **Setup Start**

Revision ID: **Stop**

Item Name: Litter Assembly

Start Date: 1/26/2011 **Start Qty:** 1.00 **Cust Item ID:**

Required Date: 2/7/2011 **Req'd Qty:** 1.00 **Customer:**

Reference:

Approvals: **Process Plan:** _____ **Date:** 1-01-26 **Tooling:** _____ **Date:** _____ **Run Start**

QC: _____ **Date:** _____ **SPC (Y/N):** _____ **Date:** _____ **Stop**

Sequence ID/ Work Center ID	Operation Description	Set Up/ Run Hours	Tool ID	Tool #	Plan Code	Accept Qty	Reject Qty	Reject Number	Insp. Stamp
Draw Nbr	**Revision Nbr**								
D2370	Rev C								
100	PURCHASING	0.00							
Purchasing	**Memo**	0.00							
Purchasing	Issue p/o: 13377 □Order: Model 12-2A undrilled with grey pad & black belts□Supplier: Ferno Aviation□Letter of compliance required								
110	Receive & Inspect for Damage & Mat'l Certs	0.00							
Packaging	**Memo**	0.00							
Packaging	Insure that letter of compliance is attached to w/o								
120	QC6- Inspect dimensions to drawing	0.00							
QC	**Memo**	0.00							
Quality Control									

CL 1/01/27 (1)

1/01/27 (1)

Su 1/28

(H)

Dart Aerospace Ltd

W/O:		WORK ORDER CHANGES					
DATE	STEP	PROCEDURE CHANGE	By	Date	Qty	Approval Chief Eng / Prod Mgr	Approval QC Inspector

Part No: _____ **PAR #:** _____ **Fault Category:** _____ **NCR:** Yes No **DQA:** _____ **Date:** _____

Resolution: _____ **Disposition:** _____ **QA: N/C Closed:** _____ **Date:** _____

NCR:		WORK ORDER NON-CONFORMANCE (NCR)						
DATE	STEP	Description of NC Section A	Corrective Action Section B			Verification Section C	Approval Chief Eng	Approval QC Inspector
			Initial Chief Eng	Action Description Chief Eng	Sign & Date			

NOTE: Date & initial all entries

H:\fFORMS\Quality Assurance\approved QA\NCRWO RevE

Work Order ID 65816

Wednesday, January 26, 2011 11:08:47 AM

Item ID: D2370 **Accept** **Setup Start**

Revision ID: **Stop**

Item Name: Litter Assembly

Start Date: 1/26/2011 **Start Qty:** 1.00 **Cust Item ID:**

Required Date: 2/7/2011 **Req'd Qty:** 1.00 **Customer:**

Reference:

Run Start

Approvals: **Process Plan:** _____ **Date:** _____ **Tooling:** _____ **Date:** _____

Stop

QC: _____ **Date:** _____ **SPC (Y/N):** _____ **Date:** _____

Sequence ID/ Work Center ID	Operation Description	Set Up/ Run Hours	Tool ID	Tool #	Plan Code	Accept Qty	Reject Qty	Reject Number	Insp. Stamp
130	Small Fab	0.00				11/02/04			
Small Fab	**Memo**	0.00							
Small Fab	1-Assemble as per Dwg D2370□2-Drill 0.191" holes as per Dwg D2370□3-Replace lose rivets with screw per dwg D2370□ Apply locktite□3-Deburr								
140	QC5- Inspect part completeness to step on W/O	0.00							
QC	**Memo**	0.00							
Quality Control									
150	Identify as per dwg & Stock Location:_____	0.00							
Packaging	**Memo**	0.00							
Packaging									

Dart Aerospace Ltd

W/O:		WORK ORDER CHANGES					
DATE	STEP	PROCEDURE CHANGE	By	Date	Qty	Approval Chief Eng / Prod Mgr	Approval QC Inspector

Part No: _____ **PAR #:** _____ **Fault Category:** _____ **NCR:** Yes No **DQA:** _____ **Date:** _____

Resolution: _____ **Disposition:** _____ **QA: N/C Closed:** _____ **Date:** _____

NCR:		WORK ORDER NON-CONFORMANCE (NCR)						
DATE	STEP	Description of NC Section A	Corrective Action Section B			Verification Section C	Approval Chief Eng	Approval QC Inspector
			Initial Chief Eng	Action Description Chief Eng	Sign & Date			

NOTE: Date & initial all entries

H:\fFORMS\Quality Assurance\approved QA\NCRWO RevE

Work Order ID 65816

Wednesday, January 26, 2011 11:08:47 AM

Item ID: D2370 **Accept** **Setup Start**

Revision ID: **Stop**

Item Name: Litter Assembly

Start Date: 1/26/2011 **Start Qty:** 1.00 **Cust Item ID:**

Required Date: 2/7/2011 **Req'd Qty:** 1.00 **Customer:**

Reference:

Run Start

Approvals: **Process Plan:** _____ **Date:** _____ **Tooling:** _____ **Date:** _____

Stop

QC: _____ **Date:** _____ **SPC (Y/N):** _____ **Date:** _____

Sequence ID/ Work Center ID	Operation Description	Set Up/ Run Hours	Tool ID	Tool #	Plan Code	Accept Qty	Reject Qty	Reject Number	Insp. Stamp
160	QC21- Final Inspection - Work Order Release	0.00					11/02/08		
QC Quality Control	**Memo**	0.00							

VME 11-02-07

Dart Aerospace Ltd

W/O:		WORK ORDER CHANGES					
DATE	STEP	PROCEDURE CHANGE	By	Date	Qty	Approval Chief Eng / Prod Mgr	Approval QC Inspector

Part No: _____ **PAR #:** _____ **Fault Category:** _____ **NCR:** Yes No **DQA:** _____ **Date:** _____

Resolution: _____ **Disposition:** _____ **QA: N/C Closed:** _____ **Date:** _____

NCR:		WORK ORDER NON-CONFORMANCE (NCR)						
DATE	STEP	Description of NC Section A	Corrective Action Section B			Verification Section C	Approval Chief Eng	Approval QC Inspector
			Initial Chief Eng	Action Description Chief Eng	Sign & Date			

NOTE: Date & initial all entries

H:\fFORMS\Quality Assurance\approved QA\NCRWO RevE

Picklist Print

Wednesday, January 26, 2011 11:08:54 AM

Work Order ID: 65816

Parent Item: D2370

Parent Item Name: Litter Assembly

Start Date: 1/26/2011 **Required Date:** 2/7/2011

Start Qty: 1.00 **Required Qty:** 1.00

Comments: IPP D □ 01.10.10□Changed D2484 nut for D3015-1□ SM
IPP E 06.12.12 ecn 888 ec□

Component Item ID/ Item Name	Replacement Item ID	Mfg/ Purch	Bin Item	Primary Location	Last Location	Route Seq ID	Unit of Measure	Qty on Hand	Qty per Kit	Total Qty	Qty Issued	Date Issued	Status
MS27039-4-06		Purchased	No			110	Each	93.0000	2	2			
Screw													
				Location			**Loc Qty**		**Loc Code**				
				ST292			93						
					109061		4						
					115460		89						
AN960JD416L	NAS1149D0416J	Purchased	No			130	Each	114.0000	4	4			
Washer													
				Location			**Loc Qty**		**Loc Code**				
				ST346			114						
					110153		114						
D2370P		Purchased	No			130	Each	0.0000	1	1			
Litter Assembly													
D2374		Manufactured	No			130	Each	22.0000	4	4			
Stud													
				Location			**Loc Qty**		**Loc Code**				
				ST012			22						
					44047		2						
					62074		20						

M114884 (4x)

11/02/04

11/02/04

11/02/04

11/02/04

Dart Aerospace Ltd

W/O:		WORK ORDER CHANGES					
DATE	STEP	PROCEDURE CHANGE	By	Date	Qty	Approval Chief Eng / Prod Mgr	Approval QC Inspector

Part No: _____ **PAR #:** _____ **Fault Category:** _____ **NCR:** Yes No **DQA:** _____ **Date:** _____

Resolution: _____ **Disposition:** _____ **QA: N/C Closed:** _____ **Date:** _____

NCR:		WORK ORDER NON-CONFORMANCE (NCR)						
DATE	STEP	Description of NC Section A	Corrective Action Section B			Verification Section C	Approval Chief Eng	Approval QC Inspector
			Initial Chief Eng	Action Description Chief Eng	Sign & Date			

NOTE: Date & initial all entries

H:\fFORMS\Quality Assurance\approved QA\NCRWO RevE

Picklist Print

Wednesday, January 26, 2011 11:08:55 AM

Work Order ID: 65816

Parent Item: D2370

Parent Item Name: Litter Assembly

Start Date: 1/26/2011 **Required Date:** 2/7/2011

Start Qty: 1.00 **Required Qty:** 1.00

D2378	Manufactured	No	130	Each	43.0000	4	4	11/02/04
Bolt								

Location	Loc Qty	Loc Code	
ST013	43		
43975	1		
61334	42		4

D3015-1	Manufactured	No	130	Each	561.0000	4	4	11/02/04
Lock Nut								

Location	Loc Qty	Loc Code	
ST033	561		
14710	561		4

Dart Aerospace Ltd

W/O:		WORK ORDER CHANGES					
DATE	STEP	PROCEDURE CHANGE	By	Date	Qty	Approval Chief Eng / Prod Mgr	Approval QC Inspector

Part No: _____ **PAR #:** _____ **Fault Category:** _____ **NCR:** Yes No **DQA:** _____ **Date:** _____

Resolution: _____ **Disposition:** _____ **QA: N/C Closed:** _____ **Date:** _____

NCR:		WORK ORDER NON-CONFORMANCE (NCR)						
DATE	STEP	Description of NC Section A	Corrective Action Section B			Verification Section C	Approval Chief Eng	Approval QC Inspector
			Initial Chief Eng	Action Description Chief Eng	Sign & Date			

NOTE: Date & initial all entries

H:\fFORMS\Quality Assurance\approved QA\NCRWO RevE

DESIGN	DRAWN BY	DART AEROSPACE LTD HAWKESBURY, ONTARIO, CANADA
KE		
CHECKED	APPROVED	DRAWING NO. REV. C
PH		D2370 SHEET 1 OF 1
DATE		TITLE SCALE
06.11.21		LITTER ASSEMBLY NTS

A	95.02.20	NEW ISSUE
B	98.06.09	ADDED ø0.191 HOLES
C	06.11.21	ADD ALTERNATE FOR D2484, MS SCREWS, TAPPED HOLES, AND 5.00 WAS 5.34

RELEASED
06 12.05

D2370	Part No.	Description
X	D2370	LITTER ASSEMBLY
4	D2374	STUD
4	D2378	MOUNTING BOLT
2	D2379	RESTRAINT BELTS
1	D2381-1	LITTER PAD
1	D2381-3	LITTER PAD
4	D2484	NUT (OR D3015-1) C
1	D2485	LITTER FRAME
4	AN960JD416L	WASHER
2	MS27039-4-06	SCREW C

SHOP COPY
RETURN TO
ENGINEERING
UNCONTROLLED COPY
SUBJECT TO AMENDMENT
WITHOUT NOTICE
WORK ORDER
NO. 65816
11-01-26

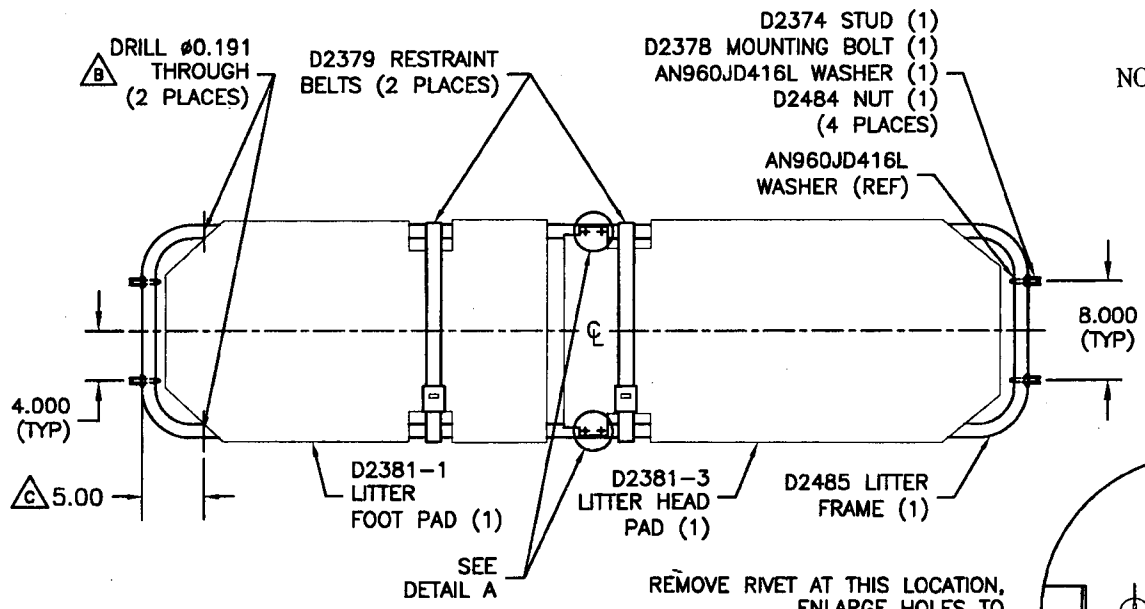

REMOVE RIVET AT THIS LOCATION, ENLARGE HOLES TO ø0.213 (#3 DRILL) x 0.75 DEEP, TAP HOLE 1/4-28 UNF x 0.50 DEEP, SECURE PARTS WITH C MS27039-4-06 SCREW (1) (2 PLACES)

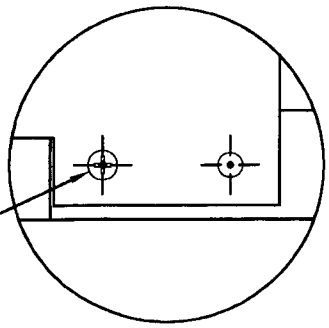

DETAIL A
RIVET REPLACEMENT

NOTES:
1) ALL DIMENSIONS ARE IN INCHES
2) TOLERANCES ARE PER DART QSI 018 UNLESS OTHERWISE STATED
3) FINISH: NONE
4) TORQUE SCREWS TO 15-25 in-lb
5) REMOVE ALL SHARP EDGES 0.010 TO 0.020 MAX

Copyright © 1995 by DART AEROSPACE LTD
THIS DOCUMENT IS PRIVATE AND CONFIDENTIAL AND IS SUPPLIED ON THE EXPRESS CONDITION THAT IT IS NOT TO BE USED FOR ANY PURPOSE OR COPIED OR COMMUNICATED TO ANY OTHER PERSON WITHOUT WRITTEN PERMISSION FROM DART AEROSPACE LTD.

Dart Aerospace Ltd

W/O:		WORK ORDER CHANGES					
DATE	STEP	PROCEDURE CHANGE	By	Date	Qty	Approval Chief Eng / Prod Mgr	Approval QC Inspector

Part No: _____ **PAR #:** _____ **Fault Category:** _____ **NCR:** Yes No **DQA:** _____ **Date:** _____

Resolution: _____ **Disposition:** _____ **QA: N/C Closed:** _____ **Date:** _____

NCR:		WORK ORDER NON-CONFORMANCE (NCR)						
DATE	STEP	Description of NC Section A	Corrective Action Section B			Verification Section C	Approval Chief Eng	Approval QC Inspector
			Initial Chief Eng	Action Description Chief Eng	Sign & Date			

NOTE: Date & initial all entries

Dart Aerospace Ltd.
1270 Aberdeen Street
Hawkesbury, ON K6A 1K7
Tel: 613 632 9577
Fax: 613 632 1053

PURCHASE ORDER

Purchase Order ID PO13377

Purchase Order Date 1/27/11
PO Print Date 1/27/11

Order From : VU-FER001

FERNO AVIATION INC.
735-B BRANCH DR.
ALPHARETTA,, GA 30004
US

Contact Name		**Buyer**	Chantal Lavoie
Vendor Phone	770 521 1005	**Requisition Nbr**	
Vendor Fax	770 521 0910	**Tax Resale Nbr**	10127-2607
Vendor Account Nbr		**Terms**	Net 30
		Currency	USD
		FOB	Destination-Collect

Ship To : DART AEROSPACE LTD 1270 ABERDEEN
HAWKESBURY, ON K6A 1K7
CANADA

FAXED 11/01/27

Line Nbr	Reference / Revision ID / Vendor Part Number	Description/ Mfg ID	Req Date/ Taxable	Req Qty/ Unit of Measure	Ship Method	Unit Price	Extended Price
1	D2370P	Litter Assembly	2/04/11 Yes	1.00 Each	FedEx PI collect	$1,380.0756	$1,380.08

Special Inst: AS PER DWG D2370 REV. C
B65816
MODEL 12-2A UNDRILLD WITH GREY
PAD &* BLACK BELT*
00000

PO Total: **$1,380.08**

CERTIFICATE OF CONFORMITY
REQ'D UPON DELIVERY

No substitution or deviation without consent.
Certificate of Conformity or Material Certification required when applicable

Change Nbr: 1 **Change Date:** 1/27/11

FERNO Aviation, INC.

735-B Branch Drive
Alpharetta, GA 30004
Office 770.521.1005 Fax 770.521.0910
http://aviation.ferno.com

Packing Slip

DATE	PACKING SLIP NO.
1/27/2011	10604

BILL TO
Dart Aerospace, Ltd. 1270 Aberdeen Street Hawkesbury, ON K6A 1K7 Canada Attn: Accounts Payable

SHIP TO
Dart Aerospace, Ltd. 1270 Aberdeen Street Hawkesbury, ON K6A 1K7 Canada Ref: PO 13377

P.O. NUMBER	TERMS	REP	SHIP DATE	SHIP VIA	FOB
13377	Net 30	CW	1/27/2011	FedEx P1	Alpharetta,GA

ITEM	DESCRIPTION	QTY ORD.	QTY DEL.
12-2A (DART)	12-2A Litter Assembly W/Gray FAA Approved cover/pad assy. and Black FAA approved patient restraints S/N: 10N165147 (HS Code 8803.30.00.00)	1	1

70 Weil Way ! Wilmington, OH 45177-9371 ! (937) 382-1451 ! FAX (937) 382-1191
Int'l FAX (937) 382-6569
Visit us at our web site: www.ferno.com

6 August 2010

Certificate of Conformance

Manufacturer:	Ferno-Washington Inc.
Manufacture Address:	70 Weil Way Wilmington, Ohio USA
Order No.	C-896315
Reference P.O.	Ferno Aviation PO#: 6405 Dart PO#: 13377
Model No.	12-2
Item Number:	Ferno-Washington # 0163255 12-2 Stretcher Gray
Serial Nos.	10N165138, 10N165141, 10N165143, 10N165144, 10N165145, 10N165146, 10N165147

Suitable

I certify that the above referenced products are produced in accordance with applicable Ferno-Washington Inc. engineering standards using approved manufacturing methods and materials. The products have been inspected using approved test procedures and inspection criteria for Ferno-Washington medical devices.

Ferno-Washington Inc. is a registered manufacturer (Registration No. 1523574) with the United States Food and Drug Administration (FDA) as a manufacturer of medical devices, and the Quality Management System has been verified by the FDA to be in compliance to FDA's Code of Federal Regulations 21 Part 820.

Ferno-Washington, Inc. maintains a Quality Management System that fulfills the requirements of DIN EN ISO 9001:2000, ISO 13485:2003 and CMDCAS (Canadian Medical Devices Conformity Assessment System). Copies of Ferno-Washington, Inc.'s ISO 9001:2000 and ISO 13485 certificates issued by DQS GmbH are available upon request.

Thomas E. Livingston
Director of Quality

FERNO

70 Weil Way ! Wilmington, OH 45177-9371 ! (937) 382-1451 ! FAX (937) 382-1191
Int'l FAX (937) 382-6569
Visit us at our web site: www.ferno.com

2010

Burn Certificate

Order No.	C-896315
Reference P.O.	Ferno Aviation PO#: 6405
Model No.	12-2
Item Number:	Ferno-Washington # 0161010 12-2 Stretcher Gray
Serial Nos.	10N165138, 10N165141, 10N165143, 10N165144. 10N165145, 10N165146, 10N165147

We certify that the material(s) listed above complies in all respects with the flammability requirements of the Department of Transportation Federal Aviation Administration FAR 25.853 appendix F Part I (a)(1)(ii).

FAR 25.853 "...The average burn length may not exceed six inches and the average flame time, after removal of the flame source, may not exceed 15 seconds. Drippings from the test specimen may not continue to flame for more than an average of three seconds after falling.

Thomas E. Livingston
Director of Quality

Aircraft Belts Inc.
1176 Telecom Drive
Creedmoor NC 27522

Form: SC-108B
Phone: (800) 847-5651
Fax: (919) 956-4220

FAA R.S. #: YB1R632K

AIRCRAFT BELTS, INC.

Packing Slip: 12111

PACKING SLIP / CERTIFICATION

TERMS: Net 30

Cust. ID: F38

Ship To:

Ferno Aviation
735-B Branch Drive
Alpharetta GA 30004

Sold To:

Ferno Aviation
735-B Branch Drive
Alpharetta GA 30004

PO: 6379
Ship Date: 7/2/2010

Ship Via:FEDEXECONOMY
SO: 86327

FOB: ORIGIN
Sales Person: Duncan, Virginia

********** *Ship UPS GROUND acct # E1129E* **********

Line	Planned Qty	Shipped Qty	Backorder	Part Number	Revision
1	75.00 EA	75.00	0.00	STFL	C
	Description: STFC3030-810 Stretcher Belt -				
2	30.00 EA	30.00	0.00	STF	C
	Description: STFC3030-810 Stretcher Belt Kit				
3	20.00 EA	20.00	0.00	SUF	A
	Description: Stretcher Belt w/Dual Shoulder Straps				

CERTIFICATION

This is to certify that the above components have been manufactured/repaired and inspected in accordance with current Federal Aviation Regulations: TSO C-22 and/or TSO C-114 and found airworthy for service unless otherwise noted. The conditions and tests required for TSO approval of this article are minimum performance standards. It is the responsability of those desiring to install either on or within a specific type of class of aircraft to determine that the aircraft installation conditions are within the TSO standards. If not within the TSO standards, the article may be installed only if further evaluation by the applicant documents an acceptable installation and is approved by the administrator. Details of this manufacture/repair are on file at this facility.

BY: _____